DINION AN 4000 KIT

www.boschsecurity.com

BOSCH
Invented for life

- Stylish and sturdy housing (IP66; NEMA 4x)
- Optimized image visibility in high-contrast areas
- Ultra-high resolution 960H sensor

These pre-packaged camera kits are complete surveillance systems that are quick and easy to install thanks to their plug-and-play design. Each kit includes a housing with a factory-installed high-performance DINION camera and varifocal lens, plus a swivel mount.
DINION 4000 cameras are compact analog cameras that offer excellent resolution in variable lighting conditions, day or night. The high performance 960H 1/3-inch CCD sensor provides a resolution of 720TVL. The cameras are an ideal solution for demanding scene conditions. The backlight compensation and highlight compensation features optimize the image visibility in high-contrast areas, automatically compensating for bright backgrounds and strong light sources.
The camera parameters can be set individually. Privacy zones and motion detection functions can be set up in the handy camera menu system.
The true day/night version automatically switches from color to monochrome using a mechanical IR filter depending on the available light.

System overview

The kit is supplied ready to operate – simply connect video and supply power. For especially challenging situations where fine tuning or special settings are required, the camera parameters can be individually set using the control buttons on the side of the camera and an On-Screen Display (OSD).

Functions

Secure and easily-installed
The sleek and sturdy housing design meets IP66 and NEMA 4X enclosure standards to protect your video surveillance equipment from adverse elements. A built-in heater and fan keep the internal temperature of the housing within the specified operating temperatures. A permanent low-power window defroster keeps the housing window clear in high humidity and icy condition. A sunshield is fitted to the top of the housing. Tamper-resistant screws for the locking clasps prevent illegitimate access to the housing contents.

Power and video cabling can be routed through external 4-pin power and BNC connectors at the rear of the housing, or through seal-tight cable glands in the foot or rear. The supplied mounting bracket has a swivel and tilt head for maximum mounting flexibility. The unique, hinged, side-opening design in the housing provides easy access to the camera/lens controls when the kit is mounted. The lens levers make it easy to accurately adjust the camera focal length and focus. The on-board camera push buttons allow the user to choose the camera setup that suits best.

Pre-wired
For easy connection, some kit models have the following 1.5 m (5 ft) cables pre-wired through seal-tight cable glands in the housing foot:
- a coaxial cable (terminated with a female BNC connector) from the back of the camera
- a power cable (18 AWG, 3-conductor with flying leads) from the housing PCB

Day/Night mode
The true day/night version provides enhanced night viewing. The mechanical IR filter can switch from color to monochrome automatically by either sensing the illumination level or via the alarm input. The filter can be switched manually via the alarm input or through the camera

Ideal picture performance
There are many settings available to help fine-tune the picture performance to match your installation environment. These include:
- BLC – automatically and dynamically compensates for strong backlight
- HLC – reduces glare from highlight areas
- Digital dynamic range – extends dynamic range of visible areas
- Contrast and sharpness – enhance details in bright or misty scenes
- Dynamic noise reduction – dynamically reduces noise in the picture

Privacy masking
Eight different privacy zones allow specific parts of a scene to be blocked. Pre-program any part of the scene to be masked.

Video Motion Detection
The built-in video motion detector allows you to select four programmable areas with sensitivity thresholds. When motion is detected, alarms can be displayed in the video signal (the true day/night version can close the output relay).

Typical applications:
- Museums and art galleries
- Shopping centers
- Offices
- Schools, colleges and universities
- Petrol/gas stations

Lens options
Two 960H IR-corrected lens versions are available for the housing kits:
- One with a 2.8-12 mm varifocal lens
- One with a 5-50 mm varifocal lens

Certifications and approvals

Standards	
Safety (low voltage versions)	EN 60950-1 UL 60950-1 (2nd edition) CSA C22.2 No. 60950-1-07 (2nd edition)
Safety (high voltage versions)	EN 60950-1
Emission	EN 55022 class B, FCC part 15 class B, EN61000-3-2, EN61000-3-3
Immunity	EN 50130-4, EN 50121-4
Vibration	Camera with 500 g (1.1 lbs) lens according to IEC 60068-2-6

Marks	CE, cULus, WEEE, PADS, RCM and China RoHS

Region	Certification	
Europe	CE	
	CE	High Voltage
USA	UL	
	FCC	
Canada	CSA	

Installation/configuration notes

Housing dimensions

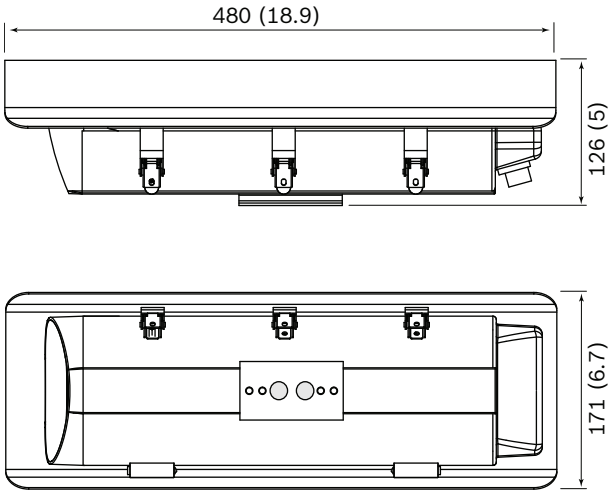

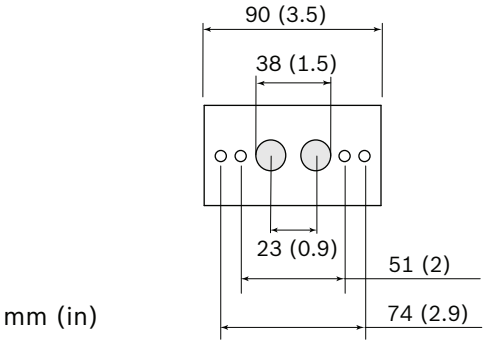

Mount dimensions

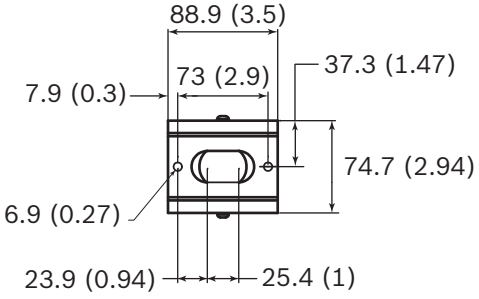

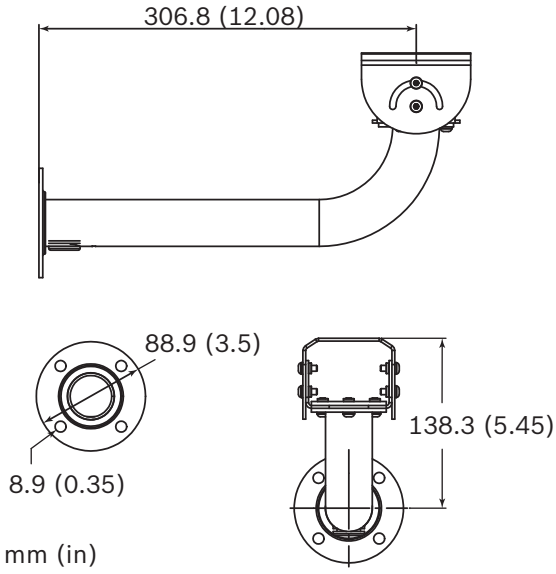

Parts included

	Item
1x	Housing (including built-in camera and lens, sunshield, heater and blower)
1x	Wall mount
1x	Documentation set
1x	Cable mounting package
1x	Identification labels

Technical specifications

Housing

Mechanical	
Dimensions (H x W x L) - closed and including sunshield	126.5 x 171.3 x 480 mm (5 x 6.7 x 18.9 in.)
Weight (including camera and lens)	3.9 kg (8.6 lbs)
Construction	Aluminum casing, neoprene gaskets, all stainless steel hardware, 3.3 mm (1/8 in.) thick glass window
Color	Gray
Locking clasps (3x)	Tamper-resistant screws provided
Camera mounting	Removable camera/lens tray, mounted with two screws
Max camera + lens size (H x W x L)	91 x 81 x 262 mm (3.6 x 3.2 x 10.3 in)

Mechanical	
Mounting	2 x pair of tapped holes (1/4-20 thread) • inner pair: 50.8 mm (2.0 in) center spread • outer pair: 73.7 mm (2.9 in) center spread
Rear fittings (-20 models)	1x cable diameter: 3.5 to 8.0 mm (0.14 to 0.32 in) 2x cable diameter: 5.8 to 10 mm (0.23 to 0.39 in)
Rear connectors (-50 models)	1x 4-pin (power) 1x BNC (hybrid analog video)
Bottom fittings (-20 models)	2x cable diameter: 4.5 to 7.9 mm (0.18 to 0.31 in)

Power	
Power input (230 VAC)	freq. 50 Hz consumption 45 W fuse 2 A
Power input (24 VAC)	freq. 60 Hz consumption 45 W fuse 4 A

Environmental	
Operating temperature	-40°C to +50°C (-40°F to 122°F) for continuous operation; -34 °C to +74 °C (-30 °F to +165 °F) according to NEMA TS 2-2003 (R2008), para 2.1.5.1 using fig. 2.1 test profile
Storage temperature	-40°C to +70°C (-40°F to +158°F)
Operating humidity	20% to 93% RH
Storage humidity	up to 98% RH
Enclosure protection	IP66, NEMA 4X

Camera

Sensor	
Type	960H, 1/3" DS CCD, sensor resolution 720TVL, WDR dual shutter
System	PAL or NTSC
Total pixels (H x V)	1020 x 596 (PAL) 1020 x 508 (NTSC)
Effective pixels (H x V)	976 x 582 (PAL) 976 x 494 (NTSC)

Video performance		
Sensitivity – (3200K, reflectivity 89%, F1.2)		
	Usable picture (50 IRE)	Usable picture (30 IRE)
Color	0.1 lx	0.05 lx
Monochrome	0.02 lx	0.01 lx

Video functions	
Video Output	Composite: 1 Vpp, 75 Ohm
Sync. System	12 VDC: Internal sync.; 24 VAC: Line-lock
S/N Ratio (sharpness, AGC off)	52 dB min.
Manual shutter	1/50 – 1/10,000 (PAL) 1/60 – 1/10,000 (NTSC)
Digital Noise reduction	2DNR
White Balance	ATW, Push, User1, User2, Anti CR, Manual, Push lock
Light compensation	OFF/BLC/HLC
Digital Dynamic Engine	On, Off
AGC	On, Off
Day/Night	Auto, Color, B/W
Burst	On, Off
Motion detection	4 programmable zones
Privacy	8 programmable zones (4 zones when motion detection is on)
Mirror	On (horizontal), Off
Sharpness	0 - 255
Alarm input (true D/N version only)	Night mode active profile switching, 3.3 V nominal, +40 VDC max.
Alarm output (true D/N version only)	Night mode active, 30 VAC or +40 VDC, max. 0.5 A continuous, 10 VA
OSD language	English, Japanese, German, French, Russian, Portuguese, Spanish, Simplified Chinese

Lens

	LVF-4000C-D2812 Varifocal Lens	LVF-4000C-D0550 Varifocal Lens
Focal length	2.8 – 12 mm	5.0 – 50 mm
Iris range	F1.3 - 360	F1.4 - 360
Min object distance	0.3 m (1.0 ft)	0.5 m (1.6 ft)
Lens mount	CS	CS

	LVF-4000C-D2812 Varifocal Lens	LVF-4000C-D0550 Varifocal Lens
Angle of view (HxV)	W: 102.2 x 74.2 T: 23.7 x 17.8	W: 49 x 36.7 T: 5.47 x 4.1
MTF on-axis (lp/mm)	>178 >146 (IR)	>145 >119 (IR)
MTF off-axis (lp/mm)	>123 >79 (IR)	>71 >30 (IR)
Iris control	4-pin, DC control	4-pin, DC control
Focus control	manual	manual
Zoom control	manual	manual
IR corrected	yes	yes

Mount

Mount LTC 9215/00	
Length	300 mm (12 in)
Maximum Load	9 kg (20 lb)
Mounting Head	Adjustable 360° pan, 180° tilt
Finish	Light gray
Approx. Weight	0.4 kg (0.9 lb)
Mounting	2 x tapped holes Thread: 1/4-20 73.7 mm (2.9 in) center spread

Ordering information

DINION AN 4000 KIT
High-performance 960H analog camera and lens in 24 VAC (60 Hz) housing. DWDR; 720 TVL; 4-zone motion detect; 8-zone privacy mask; NTSC; 2.8-12 mm lens; pre-wired
Order number **VKC-4075V4-20**

DINION AN 4000 KIT
High-performance 960H analog box camera in 24 VAC (60 Hz) housing. DWDR; 720 TVL; 4-zone motion detect; 8-zone privacy mask; NTSC; 5-50 mm lens; pre-wired
Order number **VKC-4075V10-20**

DINION AN 4000 KIT
High-performance 960H analog box camera in 230 VAC (50 Hz) housing. DWDR; 720 TVL; 4-zone motion detect; 8-zone privacy mask; PAL; 2.8-12 mm lens
Order number **VKC-4075V4-50**

DINION AN 4000 KIT
High-performance 960H analog box camera in 230 VAC (50 Hz) housing. DWDR; 720 TVL; 4-zone motion detect; 8-zone privacy mask; PAL; 5-50 mm lens
Order number **VKC-4075V10-50**

Represented by:

Americas:
Bosch Security Systems, Inc.
130 Perinton Parkway
Fairport, New York, 14450, USA
Phone: +1 800 289 0096
Fax: +1 585 223 9180
security.sales@us.bosch.com
www.boschsecurity.us

Europe, Middle East, Africa:
Bosch Security Systems B.V.
P.O. Box 80002
5617 BA Eindhoven, The Netherlands
Phone: + 31 40 2577 284
Fax: +31 40 2577 330
emea.securitysystems@bosch.com
www.boschsecurity.com

Asia-Pacific:
Robert Bosch (SEA) Pte Ltd, Security Systems
11 Bishan Street 21
Singapore 573943
Phone: +65 6571 2808
Fax: +65 6571 2699
apr.securitysystems@bosch.com
www.boschsecurity.asia

China:
Bosch (Shanghai) Security Systems Ltd.
203 Building, No. 333 Fuquan Road North IBP
Changning District, Shanghai
200335 China
Phone +86 21 22181111
Fax: +86 21 22182398
www.boschsecurity.com.cn

America Latina:
Robert Bosch Ltda Security Systems Division
Via Anhanguera, Km 98
CEP 13065-900
Campinas, Sao Paulo, Brazil
Phone: +55 19 2103 2860
Fax: +55 19 2103 2862
latam.boschsecurity@bosch.com
www.boschsecurity.com

© Bosch Security Systems 2015 | Data subject to change without notice
16335534987 | en, V2, 11. Nov 2015