DATASHEET

AXIS Q7411 Video Encoder

Full-featured, single channel video encoder with exceptional performance.

- > 60/50 fps support
- > Outstanding video processing capabilities
- > Coax PTZ Control
- > AXIS Camera Application Platform
- > Edge storage
- > Power over Ethernet

AXIS Q7411 Video Encoder is a high-performance single channel solution that enables flexible migration of analog cameras into an IP-based video surveillance system. The video encoder is ideal for both existing and new analog surveillance installations in areas such as casinos, manufacturing and law enforcement.

AXIS Q7411 is a powerful, full-featured video encoder solution offering 60/50 (NTSC/PAL) frames per second. The support for 60/50 fps provides smooth video in high motion scenes. This also enables the user to more closely follow details and changes in the monitored area, which is of major importance in forensic work.

The video encoder offers the highly efficient H.264 video compression format both in Base and Main profile, with significant savings in bandwidth and storage. Motion JPEG is also supported for increased flexibility.

AXIS Q7411 can deliver multiple, individually configurable video streams simultaneously at full frame rate in all resolutions up to D1 (720x480 in NTSC, 720x576 in PAL).

For significant installation savings, AXIS Q7411 allows PTZ control over the coaxial cable*. In addition, the video encoder also provides standard support for PTZ cameras using the serial ports. Other features include two-way audio, configurable I/O ports and microSD/ microSDHC memory.

AXIS Q7411 provides outstanding performance and intelligent video capabilities, such as tampering alarm, motion detection and audio detection, in addition to AXIS Camera Application platform applications.

Compatible with Coaxitron® by Pelco

Technical specifications – AXIS Q7411 Video Encoder

48720/EN/R1/1209

Video encoder	
Video compression	H.264 (MPEG-4 Part 10/AVC) Baseline and Main profile Motion JPEG
Resolutions	176x120 to 720x576
Frame rate H.264	60/50 (NTSC/PAL) fps in all resolutions
Frame rate Motion JPEG	60/50 (NTSC/PAL) fps in all resolutions
Video streaming	Multiple, individually configurable streams in H.264 and Motion JPEG Controllable frame rate and bandwidth VBR/CBR H.264
Pan/Tilt/Zoom	Wide range of analog PTZ cameras supported (drivers available for download at www.axis.com) 100 presets/camera, guard tour, PTZ control queue Supports Windows compatible joysticks Compatible with Coaxitron® by Pelco
Image settings	Compression, color, brightness, contrast Rotation: 90°, 180°, 270° Aspect ratio correction, mirroring of images, text and image overlay, privacy mask, enhanced deinterlace filter, video termination, anti-aliasing, temporal noise filtering
Audio	
Audio streaming	Two-way, full duplex and half duplex
Audio compression	AAC-LC 8/16 kHz, G.711 PCM 8 kHz, G.726 ADPCM 8 kHz Configurable bit rate
Audio input/ output	External microphone or line input and line output
Network	
Security	Password protection, IP address filtering, HTTPS encryption*, IEEE 802.1X network access control*, digest authentication, user access log
Supported protocols	IPv4/v6, HTTP, HTTPS*, QoS layer 3 DiffServ, FTP, CIFS/SMB, SMTP, Bonjour, UPnP™, SNMPv1/v2c/v3(MIB-II), DNS, DynDNS, NTP, RTSP, RTP, TCP, UDP, IGMP, RTCP, ICMP, DHCP, ARP, SOCKS

This product includes software developed by the Open SSL Project for use in the Open SSL Tool kit (www.openssl.org)

More information is available at www.axis.com

System integration	
Application Programming Interface	Open API for software integration, including VAPIX® and AXIS Camera Application Platform from Axis Communications, available at www.axis.com ONVIF, specification available at www.onvif.org AXIS Video Hosting System (AVHS) with One-Click Camera Connection
Intelligent video	Video motion detection, active tampering alarm AXIS Camera Application Platform enabling installation of additional applications
Event triggers	Intelligent video, external inputs, video loss, audio detection
Event actions	File upload: FTP, HTTP, network share and email Notification: email, HTTP and TCP PTZ preset External output activation Play audio clip Video and audio recording to edge storage Pre- and post-alarm video buffering Status LED
Data streaming	Event data
General	
Casing	Aluminum casing Casing color: Black - NCS S 9000-N
Memory	256 MB RAM, 128 MB Flash
Power	Power over Ethernet IEEE 802.3af Class 2 8-28 VDC input, max 5.3 W
Connectors	Analog composite video BNC input RJ-45 10BASE-T/100BASE-TX PoE Terminal block for four configurable external inputs/outputs Terminal block for RS-485/422 (full duplex) 3.5mm jack for microphone or line input (mono) 3.5mm jack for audio output (mono)
Edge storage	MicroSD/MicroSDHC memory card slot (card not included) Support for recording to network share (network-attached storage or file server)
Operating conditions	0 °C to 60 °C (32 °F to 140 °F) 0 °C to 50 °C (32 °F to 122 °F) with included Power supply Humidity 10 – 85% RH (non-condensing)
Approvals	EN 55022 Class B, EN 61000-3-2, EN 61000-3-3, EN 55024, EN 50121-4, EN61000-6-1, EN61000-6-2, EN60950-1, FCC Part 15 Subpart B ITE Class B, ICES-003 Class B, VCCI Class B ITE, C-tick AS/NZS CISPR 22, KN22, KN 24, KCC Class B, UL/IEC/EN 60950-1
Weight	520 g (1.1 lb)
Included accessories	Installation Guide, Installation and Management Software CD, Windows decoder 1-user license, Power supply, mounting and connector kits

Dimensions

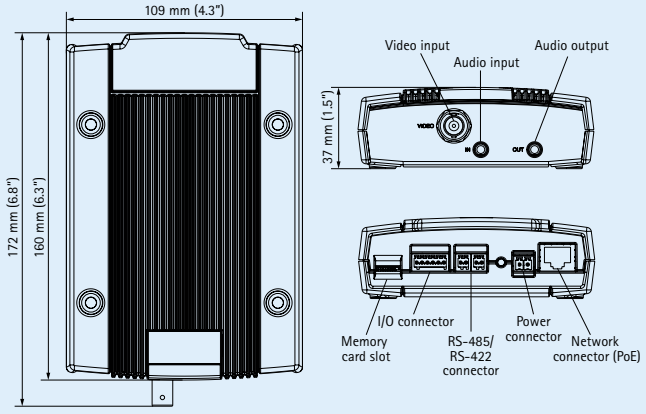

Optional accessories

AXIS Camera Companion (included), AXIS Camera Station and video management software from Axis' Application Development Partners (not included). For more information, see www.axis.com/products/video/software

AXIS T8006 PS12 - Enables operation at 60 °C (140 °F)

©2012 Axis Communications AB. AXIS COMMUNICATIONS, AXIS, ETRAX, ARTPEC and VAPIX are registered trademarks or trademark applications of Axis AB in various jurisdictions. All other company names and products are trademarks or registered trademarks of their respective companies. We reserve the right to introduce modifications without notice.