MIC IP fusion 9000i

www.boschsecurity.com

BOSCH
Invented for life

- Ruggedized IP PTZ camera with high performance thermal imager and HD visible imager sitting side-by-side
- Designed to provide the highest availability of useable images regardless of lighting conditions in extreme environments (weather, dust/debris/smoke, etc.)
- Unique metadata fusion feature provides the ultimate in situation awareness
- Exceptional early detection capabilities: Object detection up to 4517 m (14,820 ft) based on DRI criteria
- Advanced on-board intelligent video tracking, object detection even when camera is on tours

The MIC IP fusion 9000i camera is an advanced PTZ surveillance platform designed to provide early detection in mission-critical applications. With its dual visible/thermal imaging capabilities, the MIC IP fusion 9000i camera is the perfect solution for robust and high-quality imaging needs.
The camera's distinctive, ruggedized design is well-suited for extreme environments and adverse weather conditions such as high winds, rain, fog, ice, and snow.
Precision engineered using Bosch's domain expertise in material and mechanical engineering, the camera offers the most advanced imaging and positioning system solution available on the market.

Functions

Exceptional imaging performance
The MIC IP fusion 9000i camera incorporates a high-performance thermal imaging core and a 1080p starlight camera integrated in the same housing. This allows the camera to deliver simultaneous thermal and visible video streams, maximizing the ability to detect and react to long-range threats.

Thermal imager
The thermal imager incorporates the latest un-cooled vanadium oxide microbolometer technology. This high sensitivity thermal imager is equipped with a fixed focal length Athermal lens that balances the field-of-view with maximizing the detection distance.
User-adjustable settings for contrast and gain allow operators to optimize the image, ensuring delivery of the highest quality video. In addition, a wide variety of user-selectable thermal color modes are available allowing further optimization of the thermal image.
Depending on model mix, QVGA resolution (320 pixels) and VGA resolution (640 pixels) versions are available, with choice of low (<9Hz) or high (30/60Hz) frame rates.

Visible imager
The 1080p60-capable visible imager has starlight technology and a 30x optical/12x digital zoom lens that provides high-quality images, excellent color performance, and unbeatable low-light sensitivity. High dynamic range ensures clear image reproduction in the most challenging high-contrast scenes.

Ruggedized design for extreme applications
The MIC IP fusion 9000i camera is designed for surveillance applications beyond the mechanical capabilities of normal PTZ domes or conventional positioning systems.

- Ingress
  The camera is environmentally sealed and complies with Type 6P and IP68 standards, when attached to a MIC-DCA or a MIC-WMB. This level of protection eliminates any risk of dust or water ingress, making the camera a perfect choice for use in extreme environments with rain, dust, snow, flying debris, and other challenging conditions.
  In addition, the MIC camera's ingress protection method does not need periodic maintenance, which is required on cameras with pressurized housings.
- Wide operating temperature range
  The camera's operating temperature range of -40 °C to +65 °C (-40 °F to +149 °F) enables reliable surveillance monitoring in global locations from cold northern latitudes to hot equatorial and desert regions.
- Rugged construction
  The all-metal body has been engineered to withstand IK10-level impacts, and continuous low-frequency vibration. With its symmetrical, cross-section designed surfaces, the camera is also well-suited to operating in sites with high wind conditions.
- Excellent corrosion protection
  The camera benefits from Bosch Automotive domain knowledge in material engineering and coatings. As a result, the superior metallurgy, chromate based pre-coating, and paint finish of the camera provides unprecedented protection against corrosion.
  Reliability is ensured by the camera's ability to withstand a 2000-hour salt atmosphere at elevated temperature corrosion resistance test, according to the ASTM B117 test method.
- Window Wiper and Defroster
  The camera features a highly durable, silicone wiper which removes moisture from both the glass and germanium windows. In addition, both windows incorporate embedded defrosters that minimize build-up of snow and ice, ensuring the highest-possible image details in extreme cold and moist conditions.
  The wiper can also be integrated with third-party washer systems for regular cleaning and maintenance activities.

Intelligent Video Analytics on the edge
The camera includes the latest release of Intelligent Video Analytics for monitoring both the visible and the thermal image streams.

Designed for mission-critical applications, the video analytics can reliably detect, track, and analyze moving objects while suppressing unwanted alarms from spurious sources in the image, even in harsh weather conditions.
Advanced tasks like multiple line crossing, loitering, idle / removed object detection, crowd density estimation, occupancy and people counting are available for live alarming and forensic search. Object filters based on size, speed, direction, aspect ratio, and color can be defined.
Set-up time is minimized because only the installation height of the camera must be entered to calibrate the analytics.
After the camera is calibrated, the analytics engine can automatically classify objects as upright person, car, bike, or truck.

Video analytics while camera is moving
The Intelligent Video Analytics can trigger an alarm when the visible imager detects objects in motion in alarm fields while the camera is moving.
These alarm fields are defined once across all PTZ camera views. Any part of those fields that is currently within the camera's view becomes active. Thus, guard tours sweeping across the monitored areas in order to provide an intruder less time to slip by can now automatically alarm on those intruders as well.
If desired, the alarm can even be used to trigger the camera's Intelligent Tracking feature.

Metadata Fusion imaging
The metadata fusion feature enables operators to receive notification of detected events from both thermal and visible image streams, regardless of which image stream they are viewing. This gives operators a much higher level of situational awareness, and eliminates the need to monitor both visible and thermal images constantly.
For example, a standard camera viewing a scene with limited visibility produces an image such as the one below.

The same scene viewed using the visible imager of the MIC IP fusion 9000i camera would include metadata fusion events detected by the thermal imager, as shown below.

Once alerted, operators can switch to the thermal image (below) of the scene, where they can easily see the objects creating the alarm. Hence, the metadata fusion feature provides enhanced situational awareness.

Intelligent Tracking
The newest generation of the Intelligent Tracking feature ensures smoother camera motion for more comfortable viewing and more reliably tracking objects even under challenging scenes.
On the visible imager, when Intelligent Video Analytics application detects objects or individuals, the camera can automatically activate the Intelligent Tracking feature, which controls the pan/tilt/zoom actions of the camera in order to track objects and keep them in view.
Areas with potentially interfering background motion (moving trees, pulsating lights, and busy roads) can be masked out.
The camera supports 2 Intelligent Tracking modes:

- Auto mode: In this mode, the camera follows any object that has triggered an alarm in the Intelligent Video Analytics application. This mode is most useful for scenarios where the alarm cases can be clearly defined, for example, when no motion is expected at all.
- Click mode: In this mode, users can click on any object detected by the Intelligent Video Analytics application to enable the camera to track the movement of the selected object. This mode is most useful for scenarios where normal scene activity is expected.

H.265 Video encoding
The camera is designed on the most efficient and powerful H.264 and H.265/HEVC encoding platform. The camera is capable to deliver high-quality and high-resolution video with very low network load. With a doubling of encoding efficiency, H.265 is the new compression standard of choice for IP video surveillance systems.

Intelligent streaming
Smart encoding capabilities, together with Intelligent Dynamic Noise Reduction technology and analytics, make the bandwidth consumption drop to extremely low levels. Only relevant information in the scene, such as motion or objects found with the analytics, are encoded.
The camera is capable of providing 4 streams of thermal video and 4 streams of HD visible video simultaneously (8 streams total). This allows the camera to deliver independent, configurable streams for live viewing, recording, or remote monitoring via constrained bandwidths.

Recording and storage management
The Bosch Video Recording Manager application can control recording management for the camera. Alternately, the camera can use its embedded local storage and iSCSI targets directly without any recording software.
The camera's embedded local storage (internal EMMC-based memory) can be used for recording "at the edge" or for Automatic Network Replenishment (ANR) to improve the overall recording reliability. At the worst case--full streaming conditions, comprising both visible and thermal image streams, metadata, and audio--up to 4 hours of local storage time is possible. Furthermore, pre-alarm recording is available to capture details of an incident before the alarm actually occurs.

Access and Data Security
Special measures have been put in place to ensure the highest level of security for device access and data transport. The three-level password protection with security recommendations allows users to customize device access. Web browser access can be protected using HTTPS and firmware updates are always protected with authenticated secure uploads.
The on-board Trusted Platform Module (TPM) and Public Key Infrastructure (PKI) support guarantee superior protection from malicious attacks. The 802.1x network authentication with EAP/TLS, supports TLS 1.2 with updated cipher suites including AES 256 encryption.
The advanced certificate handling offers:

- Self-signed unique certificates automatically created when required
- Client and server certificates for authentication
- Client certificates for proof of authenticity
- Certificates with encrypted private keys
- Installed Bosch Escrypt certificate, which ensures that the product is produced by Bosch

System integration and ONVIF conformance
The camera conforms to the Open Network Video Interface Forum (ONVIF) Profile S and Profile G specifications. For H.265 configuration the camera also supports Media Service 2 which is part of the future ONVIF Profile T. Compliance with these standards guarantees interoperability between network video products regardless of manufacturer. Third-party integrators can easily access the internal feature set of the camera for integration into large projects. Visit the Bosch Integration Partner Program (IPP) website (ipp.boschsecurity.com) for more information.

Other Features
The camera includes many advanced features that work to maximize performance and satisfy the most demanding system operation requirements.

- Scene modes
  The camera has a very intuitive user interface that allows fast and easy configuration to optimize image quality.
  The visible imager has five user-selectable scene modes with pre-configured settings that optimize the imaging for a variety of applications, including Motion, Low light, and Vibrant. Operators can select different scene modes for day or night situations.
  The thermal imager has 12 user-selectable thermal mode options, including White hot, Black hot, Red Light, Softlight, and Sunset.

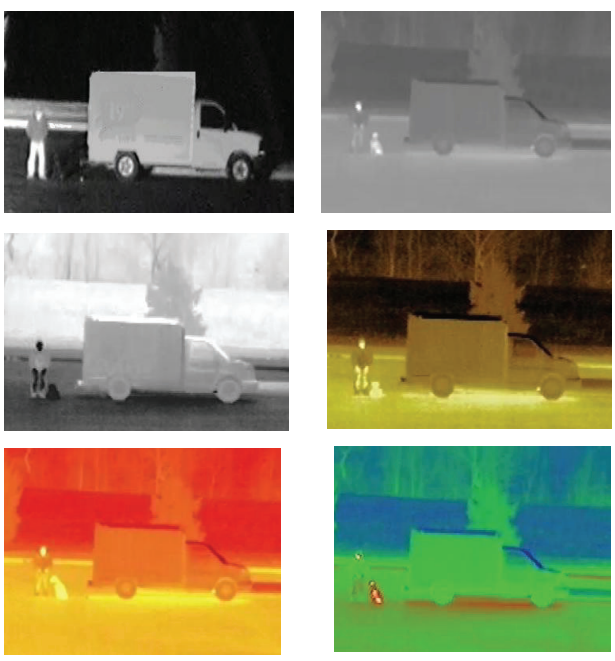

Examples of visible and thermal color modes

High performance PTZ operations
The camera has a closed-loop feedback control system using a 15-bit position resolver. This resolver ensures high accuracy coordinates are linked with every pan/tilt position. Because the camera always knows where it is pointed, it will return automatically to its original position even if moved by extremely high winds.
The pan and tilt mechanism of the camera is a ruggedized, spur gear system. The brushless motors directly control the pan and tilt movement using a finely-tuned gear train designed to minimize backlash and support continuous operation without much wear and tear.
With a full 360º continuous rotation pan, 296º tilt control, and super-quick pan (120°/second) and tilt (90°/second) operational speeds, the camera outperforms other cameras in its class.

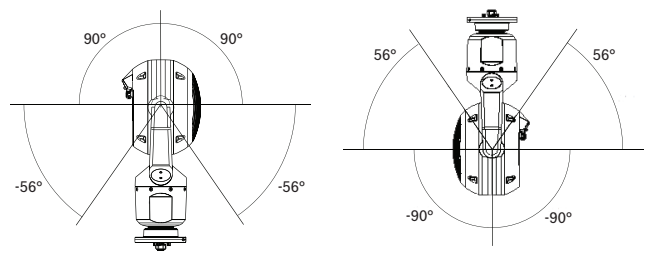

Tilt range of MIC IP fusion 9000i camera
The camera's ability to operate at very slow speeds (<0.2°/second) means it excels at tracking slow-moving objects or objects at a distance.
The camera supports 256 pre-positions and two styles of Guard Tours: Preset and Record/Playback. One preset tour has capability for up to 256 consecutive pre-positions and the other with up to 256 user-defined pre-positions. Both offer configurable dwell time between pre-positions.
The camera also provides support for two custom recorded tours, which have a combined duration of 30 minutes of movements. The custom tours are recorded macros of an operator's movements, including pan, tilt, zoom, focus and pre-position activities. Operators can play back tours in a continuous manner.

Certifications and approvals

Standards	Type
Emissions	EN 55032 class A FCC: 47 CFR Part 15 B, class A RCM: AS/NZS CISPR 32
Immunity	EN 50130-4 EN 50121-4
Environmental	IEC 60068-2-1 IEC 60068-2-2 IEC 60068-2-30

Safety	EN 60950-1 EN 60950-22 UL 60950-1, Ed. 2 CAN/CSA C22.2 No. 60950-1-07, Ed. 2 EN 62368-1 UL 62368-1
Marks	cUL, CE, WEEE, RCM, EAC, FCC, RoHS
ISO Quality Systems	ISO 9001 ISO 14001

Installation/configuration notes

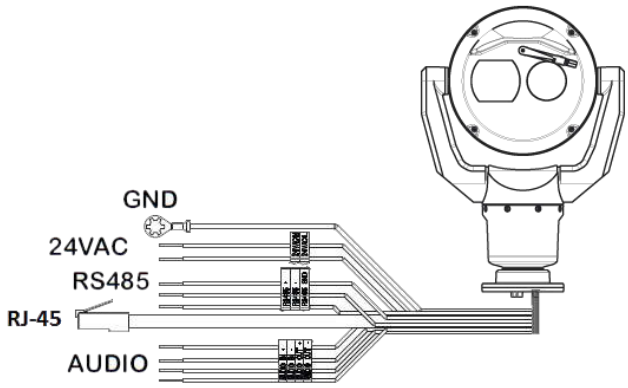

Interfaces for MIC IP fusion 9000i camera

The camera has been designed for quick and easy installation, a key feature from Bosch IP video security products.
The camera can be powered using a standard 24 VAC power source and/or by a network-compliant 95W High Power-over-Ethernet (Bosch's version of High PoE). With a 95W High PoE Midspan (NPD-9501A, sold separately) from Bosch, a single (Cat5e/Cat6e) cable connection provides everything needed to view, power, and control the camera. Using High PoE makes installation easier and more cost effective, as cameras do not require a local power source.
Easy setup is guaranteed by using or Configuration Manager or the web browser built into the camera. Access to all settings, live video, and control functions is available in a user-friendly web page format.

Technical specifications

MIC IP fusion 9000i cameras are available with different housing colors, two thermal imager resolution options, and thermal frame rate options. The last three letters of the model number identify the housing color ("B" (black), "W" (white), or "G" (grey)), the resolution, and the thermal frame rate. In the table below, "x" represents the letter for the housing color.
Note: Some models are not available in all regions.

Model	Resolution	Frame rate
MIC-9502-Z30-x**QS**	320 pixel (Standard)	<9Hz
MIC-9502-Z30-x**QF**	320 pixel (Standard)	60Hz
MIC-9502-Z30-x**VS**	640 pixel (High)	<9Hz
MIC-9502-Z30-x**VF**	640 pixel (High)	30Hz

Notice
All thermal camera models are export-controlled by the U.S. Department of Commerce (USDoC). Depending on country of installation and application, an export license may be required. For more information, contact your local Bosch Security Systems Customer Service Center.

Additional camera models with different combinations of housing color, resolution, and frame rate may be available. If you need a model not listed in the **Ordering Information** section, contact your local Bosch representative.

Thermal camera core, standard resolution (320 pixels)

Imager	Focal Plane Array (FPA), un-cooled Vanadium Oxide microbolometer
Resolution/Effective Picture Elements	320 x 240
Pixel Pitch	17 µm
Frame rate	<9Hz ("QS" models) 60Hz ("QF" models)
Lens	Athermal 19 mm (F1.1)
Field of View (FOV)	16° x 12°
Spectral Response	8 to 14 µm
Thermal Sensitivity (NEDT)	<62mK (at room temperature; Noise Reduction ON)
Focus	Factory-set at infinity
Focus Distance	14 m to ∞ (46 ft to ∞)
Contrast enhancement	On/Off
Gain Level	User-adjustable
Brightness Level	User-adjustable
Noise reduction	On/Off
User-selectable thermal color modes	12

Approximate Performance Range in ideal conditions based on DRI criteria**	Human 1.8 x 0.5 m (5.9 x 1.6 ft)	Object 2.3 x 2.3 m (7.5 x 7.5 ft)
Detection	379 m (1243 ft)	1746 m (5728 ft)
Recognition	95 m (312 ft)	436 m (1430 ft)
Identification	47 m (154 ft)	218 m (715 ft)

**For more information, including detection distances using video analytics, refer to the Video Analytics and Lens Calculator.

Thermal camera core, high resolution (640 pixels)

Imager	Focal Plane Array (FPA), un-cooled Vanadium Oxide microbolometer
Resolution/Effective Picture Elements	640 × 480
Pixel Pitch	17 µm
Frame rate	<9Hz ("VS" models) 30Hz ("VF" models)
Lens	Athermal 50 mm (F1.2)
Field of View (FOV)	12.4° x 9.3°
Spectral Response	8 to 14 µm
Thermal Sensitivity (NEDT)	<72mK (at room temperature; Noise Reduction ON)
Focus	Factory-set at infinity
Focus Distance	84 m to ∞ (276 ft to ∞)
Contrast enhancement	On/Off
Gain Level	User-adjustable
Brightness Level	User-adjustable
Noise reduction	On/Off
User-selectable thermal color modes	12

Approximate Performance Range in ideal conditions based on DRI criteria**	Human 1.8 x 0.5 m (5.9 x 1.6 ft)	Object 2.3 x 2.3 m (7.5 x 7.5 ft)
Detection	982 m (3222 ft)	4517 m (14,820 ft)
Recognition	245 m (804 ft)	1129 m (3704 ft)
Identification	123 m (404 ft)	565 m (1854 ft)

**For more information, including detection distances using video analytics, refer to the Video Analytics and Lens Calculator.

Visible camera core

Imager	1/2.8-type Exmor R CMOS sensor	
Effective Picture Elements (Pixels)	1945 x 1097 (2.13 MP)	
Resolution	Full HD (1080p)	
Lens	30x motorized Zoom 4.3 mm to 129 mm F1.6 to F4.7	
Field of View (FOV)	2.3° to 63.7°	
Focus	Automatic with manual override	
Iris	Automatic with manual override	
Digital Zoom	12x	
Sensitivity (3100K, reflectivity 89%, 1/30, F1.6, 30 IRE)	Color 0.0077 lx	Monochrome 0.0008 lx
Gain Control	AGC, Fixed	
Aperture Correction	Horizontal and vertical	
Electronic Shutter Speed (AES)	1/1 sec to 1/10000 sec (22 steps)	
Signal-to-Noise Ratio (SNR)	>55 dB	
Day/Night switch	Automatic IR cut filter	
White Balance	2000 K to 10,000 K ATW, AWB Hold, Extended ATW, Manual, Sodium Lamp Auto, Sodium Lamp	
Day/Night	Monochrome, Color, Auto	
Intelligent Defog feature	Improves visibility when viewing foggy or other low-contrast scenes.	
High dynamic range (HDR)	120 dB (25/30 fps)	

DORI	DORI definition	Distance to Object		
		WIDE 1X	TELE 30X	Scene width
Detect	25 px/m (8 px/ft)	62 m (203 ft)	1913 m (6276 ft)	77 m (252 ft)
Observe	63 px/m (19 px/ft)	25 m (81 ft)	765 m (2510 ft)	31 m (100 ft)
Recognize	125 px/m (38 px/ft)	12 m (41 ft)	383 m (1255 ft)	15 m (50 ft)
Identify	250 px/m (76 px/ft)	6 m (20 ft)	191 m (628 ft)	8 m (25 ft)

Video content analysis

Analysis type	Intelligent Video Analytics
Configurations	Off / Global VCA / Profiles 1 - 16

		Visible image	Thermal image
Masking		x	x
Alarm rules (combinable)	Any object	x	x
	Object in field	x	x
	Crossing line	x	x
	Entering field	x	x
	Leaving field	x	x
	Loitering	x	x
	Following route	x	x
	Counter	x	x
	Condition change	x	x
	Similarity search	x	x
	Flow / counter flow	x	x
	Face detection	x	
	Tampering	x	
	Motion+	x	x
	Idle object	x	
	Removed object	x	
	Crowd density estimation	x	
Object filters	Duration	x	x
	Size	x	x
	Aspect ratio v/h	x	x
	Speed	x	x
	Direction	x	x
	Object classes (Upright persons, Bikes, Cars, Trucks)	x	x
	Color	x	
Tracking Mode	Standard tracking (2D)	x	x
	3D tracking	x	x
	3D people tracking	x	x
	Ship tracking	x	x
	Museum mode	x	x

Network

Standard/Video compression	H.265, H.264 (ISO/IEC 14496), M-JPEG, JPEG
Streaming	Multiple and independent streams using H. 264 or H.265, plus M-JPEG. Configurable frame rate and bandwidth. Regions of Interest (ROI).
Supported Streams	SD 720p 1080p D1 4:3 (cropped) 640x480 1280x1024 (cropped)
Resolution (H x V)	
1080p HD	1920 x 1080
720p HD	1280 x 720
432p SD	768 x 432
288p SD	512 x 288
144p SD	256 x 144
Protocols	IPv4, IPv6, UDP, TCP, HTTP, HTTPS, RTP/RTCP, IGMP V2/V3, ICMP, ICMPv6, RTSP, FTP, ARP, DHCP, APIPA (Auto-IP, link local address), NTP (SNTP), SNMP (V1, MIB-II), 802.1x, DNS, DNSv6, DDNS (DynDNS.org, selfHOST.de, no-ip.com), SMTP, iSCSI, UPnP (SSDP), DiffServ (QoS), LLDP, SOAP, Dropbox, CHAP, digest authentication

Note: Dropbox is a trademark of Dropbox, Inc.

Ethernet	10BASE-T/100BASE-TX, auto-sensing, half/full duplex
Encryption	TLS 1.0, SSL, DES, 3DES, AES
Ethernet connector	RJ45
GOP Structure	IP, IBP, IBBP
Data Rate	H.265, 1080P: 61 kbps to 2.8 Mbps (depending on the scene, the frame rate, and the quality settings) H.264: 9.6 kbps to 6 Mbps
IP Delay (camera only)	30fps: 120ms 60fps: 67ms
Connectivity	ONVIF Profile S, ONVIF Profile G, Auto-MDIX
Quality of service (QoS)	User-selectable options

Additional functions	
Video authentication	Off / Watermark / MD5 / SHA-1 / SHA-256
Display Stamping	Name, Time, Pre-position title, Sector title, Compass/telemetry, Lens zoom factor, Alarm message, Custom Logo bitmap
Pixel Counter	Selectable area
Live image indicator	On/Off

For standard scenes, the average typical optimized bitrate in kbits/second for various visible imaging frame rates is shown in the following table:

FPS	1080p		720p	
	H.264	H.265	H.264	H.265
60	4200	1649	2600	1249
30	2600	1413	1300	1096
15	2100	1157	1100	902
12	1800	1075	1000	841
5	1250	746	600	597
2	500	407	270	343

For standard scenes, the average typical optimized bitrate in kbits/second for various thermal imaging frame rates is shown in the following table:

320 Resolution		640 Resolution	
FPS	H.264/H.265	FPS	H.264/H.265
60	360	30	850
30	196	15	510
15	125	9	250
12	105	4.5	180
10	96	3	105
7.5	77	1	70
6	70		
5	63		
4	55		
3	52		
2	31		
1	15		

Actual bitrate may vary depending on the scene complexities and encoding configurations.

Local Storage

Recording capacity	16GB of internal EMMC-based memory. Provides local recording for minimum of 4 hours that includes continuous recording at maximum fps of both visible and thermal image streams, metadata, and audio.

Access and Data Security

Password protection	Three-level
Web browser protection type	HTTPS
Firmware updates	Protected with authenticated secure uploads
Trusted Platform Module (TPM)	Supported
Public Key Infrastructure (PKI)	Supported
802.1x network authentication with EAP/TLS	Supports TLS 1.2 with updated cipher suites including AES 256 encryption
802.1x authentication using a RADIUS (Remote Authentication Dial In User Service) server	Supported
SSL certificate for use with HTTPS	Supported
AES encryption	Supports independent encryption with 128-bit keys

Miscellaneous

Sectors / Title	4, 8, 12, or 16 user-selectable, independent Sectors, each with 20 characters per Title
Privacy Masks	32, individually configurable; maximum 8 per Pre-position; programmable with 3, 4 or 5 corners; selectable color of Black, White, or Gray, as well as an “Auto” option in which the camera selects the most prevalent of the three colors (Black, White, or Gray) in the background scene as the Pattern color.
Virtual Masks	24 individually configurable Virtual Masks to hide parts of the scene (background motion such as moving trees, pulsating lights, busy roads, etc.) which should not be considered for flow analysis to triggerIntelligent Tracking.
Pre-positions	256, each with 20 characters per Title
Guard Tours	Custom Recorded Tours - two (2), total duration 30 minutes: Pre-position tour - one (1), consisting of up to 256 scenes consecutively, and one (1) customized with up to 256 user-defined scenes
Supported Languages	English, Czech, Dutch, French, German, Italian, Polish, Portuguese, Russian, Spanish, Japanese, Chinese

Alarm control	Rules-based logic supports basic and complex pre-defined user-specified commands In its most basic form, a “rule” could define which input(s) should activate which output(s).
Washer Pump Interface	Control functions integrated. Alarm/Washer Interface Unit (MIC-ALM-WAS-24, sold separately) provides electrical interface to user supplied washer pump device.
Camera status monitoring	Integrated sensors monitor operational status such as internal temperature, humidity level, incoming voltage level, vibration, and shock events.
Diagnostics	Various status conditions are tracked in internal diagnostic log. Critical fault conditions will also be displayed on screen.
Supported mounting options (with applicable accessories)	Direct to a surface On a wall (Cables through the wall) On a wall (Conduit/cables down the wall) On the corner of a wall On a pole

Mechanical

Drive Unit	Brushless, integral pan/tilt motor drive
Supported mounting orientation	Upright Inverted
Pan Range	360° continuous rotation
Tilt Angle	292°
Tilt Range	Upright unit: -56° to +90° Inverted unit: -90° to +56°
Variable Pan Speed	0.2°/second to 120°/second
Variable Tilt Speed	0.2°/second to 90°/second
Intelligent Tracking Speed	4°/second to 120°/second
Pre-position Speed	Maximum 120°/second, with no more than 2.5 seconds to reach new position (excluding time to zoom and focus at new position)
Preposition Accuracy	0.05° (typical)
Proportional Pan / Tilt to Zoom	Yes
Audible Noise	<65 dB

Electrical

Input Voltage	21-30 VAC, 50/60 Hz, and/or High Power over Ethernet 56VDC nominal
Current Consumption	4.0A (24 VAC) 1.5A (High PoE)
Power Consumption (typical) (Includes integrated heater, defroster, and fan)	72W (24 VAC) 72W (High PoE)
High PoE	95W High Power over Ethernet (Requires NPD-9501A midspan from Bosch (sold separately).) 56VDC
Redundant configuration	Connect both High PoE Midspan and a separate 24 VAC power source. If either the High PoE or 24 VAC power source fails, the camera seamlessly transitions over to use the remaining power source.
Surge protection	Built-in surge protection for power, data, and network interfaces

Communications / Software Control

Camera Setup/ Control	Via Internet Explorer web browser version 7.0 or later, Bosch Configuration Manager, Bosch Video Management System (BVMS), Bosch Video Security Client (VSC), or support for third party software
Supported Serial Protocols	Bosch OSRD, Pelco D/P, Forward Vision, Cohu. Requires separate eLicense installation.
Cloud-based services	Time-based or alarm-based JPEG posting to four different accounts. Accounts can address FTP servers or cloud-based storage facilities. Alarm events can be set up to trigger an e-mail or SMS notification.
Firmware upload	Completed over network using built-in web browser or from Bosch Configuration Manager

User Connections

Accessory Interface/ Control Data	RS-485, Simplex, half and full duplex, user-selectable baud rate or auto-baud Used to communicate with optional Alarm/ washer interface box (MIC-ALM-WAS-24) or with Bosch OSRD, Pelco P/D, Forward Vision, and Cohu serial protocols.
Power, network	Ethernet High PoE (95 W) RJ45 10/100Base-Tx, male connector; Female-to-female RJ45 coupler included
Power, pigtail	24 VAC (nominal)
Chassis ground	Ground wire with connector lug

Audio

Compression	G.711, AAC, and L16 (live and recording)
Signal-to-Noise Ratio (SNR)	Audio-in: 47 dBA (A-weighting) Audio out: 50 dBA (A-weighting)

Mode	Two-way, full duplex audio communication
User connections	Line in: 15k ohm typical, 1.0Vrms, max Line out: 0.8Vrsm at 12K ohm, typical

Environmental

Ingress Protection Rating/Standard	IP68 / Type 6P (dust and immersion) when installed on a MIC-DCA or on a MIC wall mount
	IP67 (moisture and dust) rating on connectors in the base of the camera when using the IP67 Connector Kit (MIC-9K-IP67-5PK), which is also required when using non-Bosch mounts
	IP66 (directed spray) when installed on a MIC-DCA or on a MIC wall mount
External Mechanical Impact (IK Code or Impact rating)	IK10 (excluding windows)
Operating temperature	-40 °C to +65 °C (-40 °F to +149 °F)
NEMA TS 2-2003 (R2008), para 2.1.5.1 using fig. 2.1 test profile	-34 ºC to +74 ºC (-30 ºF to +165 ºF)
Storage Temperature	-40 °C to +70 °C (-40 °F to +158 °F)
Humidity	0 to 100%
Wind Load	160 km/h (100 mph) (sustained) 241 km/h (150 mph) (gusts)
Effective Projected Area (EPA)	Camera: 0.0910 m² / 0.98 ft² Camera and sunshield: 0.0929 m² / (1.00) ft² MIC Wall Mount: 0.0483 m² / 0.52 ft²
Vibration	IEC 60068-2-6, Test Fc: Vibration (sinusoidal), 10m/s² (1.0g) Sinusoidal vibration test IAW MIL-STD-167-1A
Shock	IEC 60068-2-27, Test Ea: Shock, 45g, 6ms Half Sine Impulse

Construction

Dimensions (W x H x D)	421 mm x 298 mm x 181 mm (11.74 in. x 16.58 in. X 7.14 in.)
Weight	9.0 kg (19.7 lb)
Window	Borosilicate glass (optical) Germanium (thermal)
Construction Material	Cast solid aluminum
Window Wiper	Integrated, long-life silicone wiper
Heater	Integrated
Fan	Integrated
Defroster	Embedded in optical and thermal windows, with de-icing capability
Sunshield (to minimize sun loading in hot climates)	Optional; sold separately
Standard Finish	Chromate-based surface treatment with powder coat paint, sand finish
Standard Colors	Black (RAL 9005), White (RAL 9010), Grey (RAL 7001), Desert (Some colors may not be available in some regions.)

Dimensional Drawings

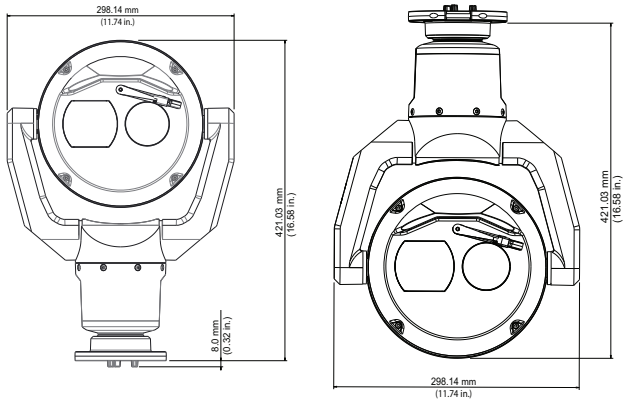

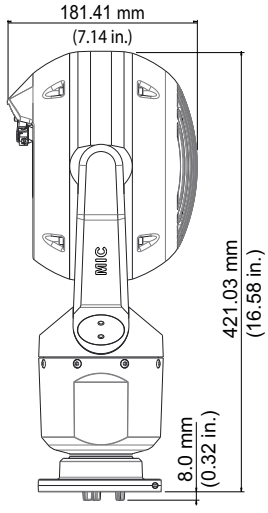

Ordering information

MIC-9502-Z30BQS PTZ thermal QVGA-19mm 2MP 30x 9Hz, black
Ruggedized dual thermal/visible PTZ camera. 30x visible zoom. Thermal imager with standard resolution (320x240 pixels), <9 Hz frame rate, and 19 mm lens. Black housing color.
Order number **MIC-9502-Z30BQS**

MIC-9502-Z30WQS PTZ thermal QVGA-19mm 2MP 30x 9Hz, white
Ruggedized dual thermal/visible PTZ camera. 30x visible zoom. Thermal imager with standard resolution (320x240 pixels), <9 Hz frame rate, and 19 mm lens. White housing color.
Order number **MIC-9502-Z30WQS**

MIC-9502-Z30GQS PTZ thermal QVGA-19mm 2MP 30x 9Hz, gray
Ruggedized dual thermal/visible PTZ camera. 30x visible zoom. Thermal imager with standard resolution (320x240 pixels), <9 Hz frame rate, and 19 mm lens. Grey housing color.
Order number **MIC-9502-Z30GQS**

MIC-9502-Z30BVS PTZ thermal VGA-50mm 2MP 30x 9Hz, black
Ruggedized dual thermal/visible PTZ camera.30x visible zoom. Thermal imager with high resolution (640x480 pixels), <9 Hz frame rate, and 50 mm lens. Black housing color.
Order number **MIC-9502-Z30BVS**

MIC-9502-Z30WVS PTZ thermal VGA-50mm 2MP 30x 9Hz, white
Ruggedized dual thermal/visible PTZ camera.30x visible zoom. Thermal imager with high resolution (640x480 pixels), <9 Hz frame rate, and 50 mm lens. White housing color.
Order number **MIC-9502-Z30WVS**

MIC-9502-Z30GVS PTZ thermal VGA-50mm 2MP 30x 9Hz, gray
Ruggedized dual thermal/visible PTZ camera.30x visible zoom. Thermal imager with high resolution (640x480 pixels), <9 Hz frame rate, and 50 mm lens. Grey housing color.
Order number **MIC-9502-Z30GVS**

MIC-9502-Z30BVF PTZ thermal VGA-50mm 2MP 30x 30Hz, black
Ruggedized dual thermal/visible PTZ camera. 30x visible zoom. Thermal imager with high resolution (640x480 pixels), 30 Hz frame rate, and 50 mm lens. Black housing color.
Order number **MIC-9502-Z30BVF**

MIC-9502-Z30WVF PTZ thermal VGA-50mm 2MP 30x 30Hz, white
Ruggedized dual thermal/visible PTZ camera. 30x visible zoom. Thermal imager with high resolution (640x480 pixels), 30 Hz frame rate, and 50 mm lens. White housing color.
Order number **MIC-9502-Z30WVF**

MIC-9502-Z30GVF PTZ thermal VGA-50mm 2MP 30x 30Hz, gray
Ruggedized dual thermal/visible PTZ camera. 30x visible zoom. Thermal imager with high resolution (640x480 pixels), 30 Hz frame rate, and 50 mm lens. Grey housing color.
Order number **MIC-9502-Z30GVF**

Accessories

MIC-DCA-HB Deep conduit mount, M25 holes, black
DCA mount for MIC7000 and MIC IP fusion 9000i cameras. Aluminum. Two M25 holes for conduit/cable glands.
Black (RAL 9005) color.
Order number **MIC-DCA-HB**

NPD-9501A Midspan, high PoE, single port, AC in
High PoE, 95 W, Single port indoor Midspan. 120/230VAC input. Supplies a data and power interface to camera using a single standard CAT5e (or better) network cable.
Order number **NPD-9501A**

MIC-DCA-HW Deep conduit mount, two M25 holes, white
DCA mount for MIC7000 and MIC IP fusion 9000i cameras. Aluminum. Two M25 holes for conduit/cable glands.
White (RAL 9010) color.
Order number **MIC-DCA-HW**

MIC-DCA-HG Deep conduit mount, two M25 holes, grey
DCA mount for MIC7000 and MIC IP fusion 9000i cameras. Aluminum. Two M25 holes for conduit/cable glands.
Grey (RAL 7001) color. Available in specific regions only.
Order number **MIC-DCA-HG**

MIC-DCA-HBA Deep conduit mount, M25 holes, black
DCA mount for MIC7000 and MIC IP fusion 9000i cameras. Aluminum. Two M25 holes for conduit/cable glands. Includes an conduit adapter (male M25 to female 3/4" NPT). Available in specific regions only.
Black (RAL 9005) color.
Order number **MIC-DCA-HBA**

MIC-DCA-HWA Deep conduit mount, M25 holes,white
DCA mount for MIC7000 and MIC IP fusion 9000i cameras. Aluminum. Two M25 holes for conduit/cable glands. Includes an conduit adapter (male M25 to female 3/4" NPT). Available in specific regions only.
White (RAL 9010) color.
Order number **MIC-DCA-HWA**

MIC-DCA-HGA Deep conduit mount, M25 holes,grey
DCA mount for MIC7000 and MIC IP fusion 9000i cameras. Aluminum. Two M25 holes for conduit/cable glands. Includes an conduit adapter (male M25 to female 3/4" NPT). Available in specific regions only. Grey (RAL 7001) color.
Order number **MIC-DCA-HGA**

MIC-CMB-BD Corner mount bracket, black
Corner mount bracket, black sand finish (RAL9005)
Order number **MIC-CMB-BD**

MIC-CMB-WD Corner mount bracket, white
Corner mount bracket, white sand finish (RAL9010)
Order number **MIC-CMB-WD**

MIC-CMB-MG Corner mount bracket, grey sand
Corner mount bracket.
Grey (RAL 7001). Available in specific regions only. Sand finish.
Order number **MIC-CMB-MG**

VG4-A-PSU1 PSU, 120VAC, for AUTODOME, MIC7000
Power supply, 120VAC input, 24VAC output @ 96VA. Suitable for powering AUTODOME, MIC IP 7000, and MIC IP fusion 9000i cameras. White aluminum enclosure with cover. IP66 ingress. IK10 impact.
Order number **VG4-A-PSU1**

MIC-WMB-BD Wall mount bracket , black
Wall mount bracket, black sand finish (RAL9005)
Order number **MIC-WMB-BD**

VG4-A-PSU2 Power supply, 230VAC, AUTODOME, MIC7000
Power supply, 230VAC input, 24VAC output @ 96VA. Suitable for powering AUTODOME, MIC IP 7000, and MIC IP fusion 9000i cameras. White aluminum enclosure with cover. IP66 ingress. IK10 impact.
Order number **VG4-A-PSU2**

MIC-WMB-WD Wall mount bracket, white
Wall mount bracket, white sand finish (RAL9010)
Order number **MIC-WMB-WD**

MIC-WMB-MG Wall mount for rugged PTZ camera, grey
Wall Mount Bracket.
Grey (RAL 7001). Available in specific regions only. Sand finish.
Order number **MIC-WMB-MG**

MIC-PMB Pole mount bracket
Pole mount bracket (includes 2 x 455 mm stainless steel banding straps for pole diameters 75 to 145 mm)
Order number **MIC-PMB**

MIC-SPR-BD Wall mount spreader plate, black sand
Aluminum spreader plate suitable for brickwork surface mounting, black sand finish (RAL9005)
Order number **MIC-SPR-BD**

MIC-SPR-WD Wall mount spreader plate, white sand
Aluminum spreader plate suitable for brickwork surface mounting, white sand finish (RAL9010)
Order number **MIC-SPR-WD**

MIC-SPR-MG Wall mount spreader plate, grey sand
Aluminum spreader plate suitable for brickwork surface mounting.
Grey (RAL 7001). Available in specific regions only. Sand finish.
Order number **MIC-SPR-MG**

MIC-ALM-WAS-24 Interface box, alarm, washer pump, 24VAC
Order number **MIC-ALM-WAS-24**

MIC-SCA-BD Shallow conduit adapter, black sand
Shallow conduit adapter for a MIC-WMB, a MIC-PMB, or a MIC-SPR, black sand finish (RAL9005)
Order number **MIC-SCA-BD**

MIC-SCA-WD Shallow conduit adapter, white sand
Shallow conduit adapter for a MIC-WMB, a MIC-PMB, or a MIC-SPR mount, white sand finish (RAL9010)
Order number **MIC-SCA-WD**

MIC-SCA-MG Shallow conduit adapter, grey sand
Shallow conduit adapter for a MIC-WMB, a MIC-PMB, or a MIC-SPR.
Grey (RAL 7001). Available in specific regions only. Sand finish.
Order number **MIC-SCA-MG**

MIC-WKT-IR Washer kit, MIC IR
Washer kit for analog infrared MIC camera models as well as for MIC IP starlight 7000i and MIC IP fusion 9000i camera models.
Order number **MIC-WKT-IR**

MIC-M25XNPT34 Adapter, M25 to 3/4"NPT, stainless steel
Stainless Steel M25 to ¾” NPT thread adapter
Order number **MIC-M25XNPT34**

MIC-9K-SNSHLD-W Sunshield thermal PTZ camera, white
Sunshield kit for MIC IP fusion 9000i cameras, white color. Recommended for use with white color MIC IP fusion 9000i cameras installed in locations with high sun load.
Order number **MIC-9K-SNSHLD-W**

MIC-9K-IP67-5PK Connector kit thermal PTZ IP67 5pieces
5-pack weather protection kit for MIC IP fusion 9000i thermal cameras. Provides an IP67-rated barrier against dust or moisture. White color.
Order number **MIC-9K-IP67-5PK**

Software Options

MVS-FCOM-PRCL License key for serial protocol
Serial Protocol Software License (e-license) for IP Cameras
Order number **MVS-FCOM-PRCL**

Represented by:

Europe, Middle East, Africa:
Bosch Security Systems B.V.
P.O. Box 80002
5600 JB Eindhoven, The Netherlands
Phone: + 31 40 2577 284
emea.securitysystems@bosch.com
emea.boschsecurity.com

Germany:
Bosch Sicherheitssysteme GmbH
Robert-Bosch-Ring 5
85630 Grasbrunn
Germany
www.boschsecurity.com

North America:
Bosch Security Systems, Inc.
130 Perinton Parkway
Fairport, New York, 14450, USA
Phone: +1 800 289 0096
Fax: +1 585 223 9180
onlinehelp@us.bosch.com
www.boschsecurity.us

Asia-Pacific:
Robert Bosch (SEA) Pte Ltd, Security Systems
11 Bishan Street 21
Singapore 573943
Phone: +65 6571 2808
Fax: +65 6571 2699
apr.securitysystems@bosch.com
www.boschsecurity.asia

© Bosch Security Systems 2017 | Data subject to change without notice
4446695691 | en, V1, 02. Nov 2017