DS-1271ZJ-120

Pendent Mounting Bracket for

Mini Dome Camera

Features:

- Aluminum alloy material with surface spray treatment
- Waterproof rubber suits for indoor/outdoor design
- The internal wiring makes the feature looks better
- Outlet hole is reserved for convenient wiring indoor
- Better water proof design

Order Model:

DS-1271ZJ-120

Parameter:

Model / Parameters	DS-1271ZJ-120
	Pendent Mounting Bracket for Mini Dome Camera
Appearance	Hik White
Range of Application	Suitable for dome camera pendent mounting
Material	Aluminum Alloy
Dimension	150×573mm
Weight	1290g

Dimension:

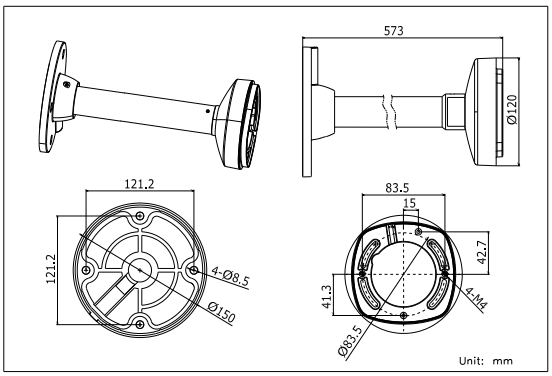

Notice:

- The bracket should be installed on flat wall
- Waterproof rubber is necessary for outdoor application
- The wall must be capable of supporting over 3 times as much as the total weight of the camera and the mount.
- The maximum load capacity of the bracket is 4.5KG

Model Suitable:

DS-2CS58A1P-IRS, DS-2CS54A1P-IR, DS-2CD2512F-I(W), DS-2CD2532F-I(W), DS-2CD7133-E, DS-2CD7153-E, DS-2CD7164-E

Installation Step:

① Choose the appropriate wall to install the ceiling plate

Waterproof rubber is necessary for outdoor application

② Connect suspender and adapter; thread the cable and screw up

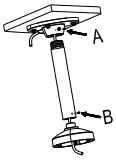

A&B: Tightening Screw

③ Screw up and fix the adapter to pole

④ Take off the lower dome and check the hole site of adapter plate

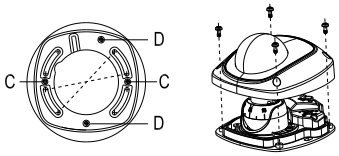

C: DS-2CS58A1XX,DS-2CD25XX
D: DS-2CD71XX

⑤ Install the adapter to the bracket and screw up

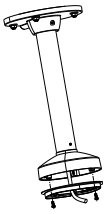

⑥ Connect the cable and fix the camera onto the adapter plate

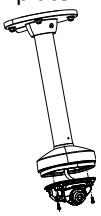

⑦ Modify the angle of view, install the lower dome and screw up

⑧ Installation complete.

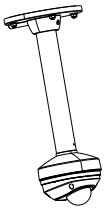

Note: The actual bracket may vary from the picture above.