DS-1707ZJ-Y-E

Wall Mount

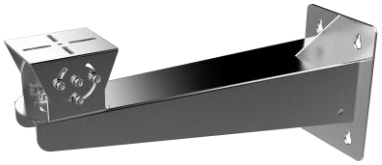

Features

- Adopts the stainless steel structure
- Applied to both indoor conditions, and outdoor conditions

Dimension

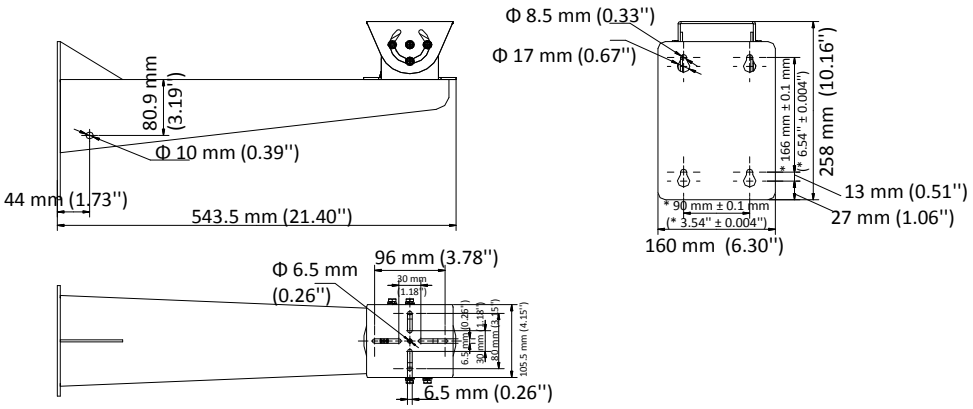

Available Model

DS-1707ZJ-Y-E

Parameter

Model / Parameters	DS-1707ZJ-Y-E
	Wall Mount
Appearance	Unpainted Stainless Steel
Material	SUS316L
Dimension	543.5 mm × 160 mm × 258 mm (21.40" × 6.30" × 10.16")
Weight	4.98 kg (10.98 lb.)

Notes

- The mount should be installed on the flat surface.
- Waterproof rubber is necessary for the outdoor application.
- The wall should be capable of supporting at least 3 times as much as the total weight of the camera, and the mount.
- The maximum load capacity of the mount is 20 kg (44.09 lb.).